LB ALUMINIUM BERHAD

198501006093 (138535-V)

PERFORMANCE LOUVRE SYSTEMS

Screening, Ventilation and Rain Defence

ALBESiana® PL-SB01

ALBESiana® PL-DB01

ALBESiana® PL-TB01

ALBESiana® PL-TB02

WWW.LBALUM.COM

TABLE OF CONTENTS PAGE NUMBER

1) ALBESiana PERFORMANCE LOUVRE SYSTEMS

a) Introduction of ABLESiana, Test Method & Classification 1/13

2) ALBESiana PL-SB01

a) Drawing of Assembly 2/13
b) Rainwater Penetration 3/13
c) Coefficient of Entry 3/13
d) Coefficient of Discharge 4/13

3) ALBESiana PL-DB01

a) Drawing of Assembly 5/13
b) Rainwater Penetration 6/13
c) Coefficient of Entry 6/13
d) Coefficient of Discharge 7/13

4) ALBESiana PL-TB01

a) Drawing of Assembly 8/13
b) Rainwater Penetration 9/13
c) Coefficient of Entry 9/13
d) Coefficient of Discharge 10/13

5) ALBESiana PL-TB02

a) Drawing of Assembly 11/13
b) Rainwater Penetration 12/13
c) Coefficient of Entry 12/13
d) Coefficient of Discharge 13/13

PERFORMANCE LOUVRE SYSTEMS

PERFORMANCE LOUVRES

By definition, a performance louvre system is a stack of specially designed louvre blades spaced out in such a way as to regulate air flow while restricting water leakage across the louvre panel.

APPLICATIONS

1. Building envelope over spaces
2. HVAC facility rooms (heating ventilation and air conditioning
3. Electrical switch rooms
4. Plant rooms with special machineries
5. Warehouses and distribution centres
6. Staircase landing and protected walkway
7. Car parks

BS EN 13030

The BS EN 13030 standard sets the guidelines for testing and provides useful classifications for the water ingress levels and pressure drop coefficients of a louvre system. This is a well recognised industy standards for louvre system in Europe.

ALBESiana Performance louvres are fully tested at BSRIA to establish their performance levels.

PROPERTIES

- Fabricated from alloy 6063-T5 extruded aluminium profiles
- Require minimum maintenance
- Are available in anodised, powder-coated or PVDF finishes
- Are fully tested to the BS EN 13030 standard at BSRIA - The Building Services Research and Information Association, UK.

ALBESiana PERFORMANCE LOUVRES SYSTEMS

(a) ***Single Bank Aluminium Louvre :***
Provides basic weather protection and ventilation, allowing airflow while reducing rain and debris entry.

(b) ***Double Bank Aluminium Louvre :***
Offers improved rain defense and airflow control with staggered blades for enhanced weather protection.

(c) ***Triple Bank Aluminium Louvre :***
Delivers maximum weather protection and significant airflow, ideal for harsh conditions with superior performance.

RAIN DEFENSE CLASSIFICATION

Class	Effectiveness	Max. allowed rain penetration l/h/m²
A	99% to 100%	0.75
B	95% to 98.9%	3.75
C	80% to 94.9%	15
D	Below 80%	Greater than 15.00

Note : Water penetration effectiveness is measured for each of eight face velocities from 0 m/s to 3.5 m/s. Louvre penetration class should always be expressed in the context of the face velocity it was measured at.

AIR FLOW CLASSIFICATION

Class	Airflow Effectiveness	Performance Rating
1	0.4 to 1	Excellent
2	0.3 to 0.399	Very Good
3	0.2 to 0.299	Good
4	0.199 & below	Fair

Note : Discharge / entry loss coefficient is expressed as a single class, based on an average result over a range of face velocities. The higher the coefficient, the less resistant the louvre : allowing air to pass more freely.

TYPICAL ASSEMBLY SECTIONAL DETAILS

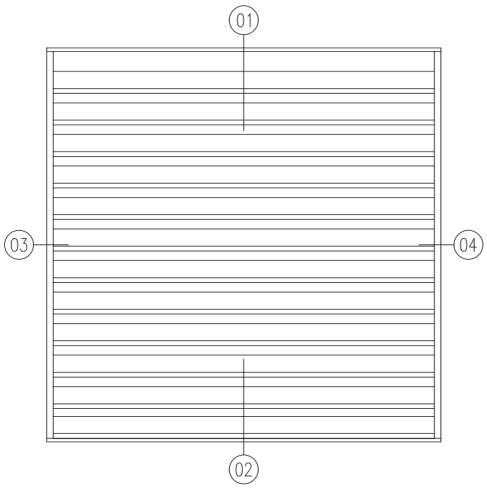

ELEVATION

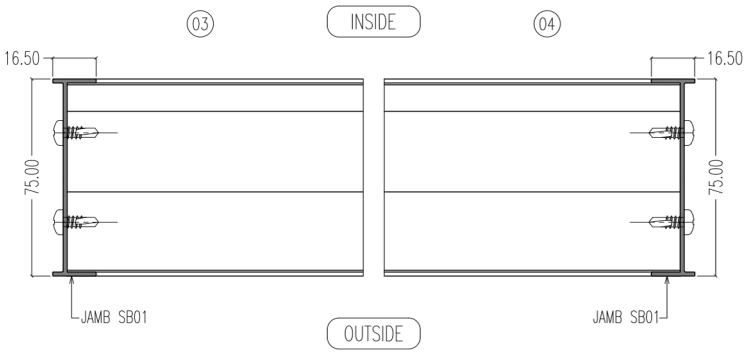

HORIZONTAL SECTIONS

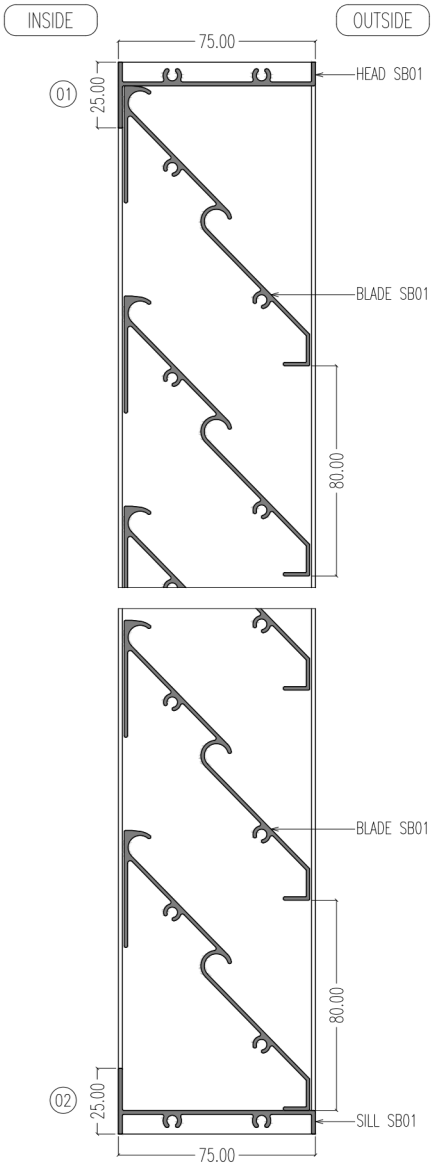

VERTICAL SECTION

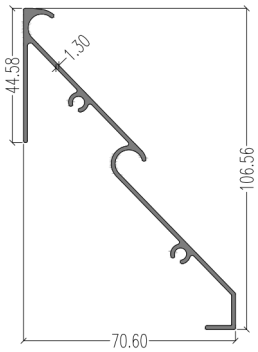

Blade SB01

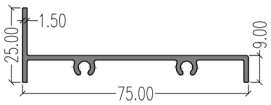

Head & Sill SB01

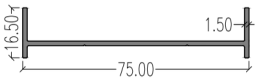

Jamb SB01

RAINWATER PENETRATION

			Core Area Height	987	mm
Simulated Rainfall	75 (+10% / -0%)	mm/hr	Core Area Width	969	mm
Wind Speed	13 (+/-10%)	m/s	Core Area Area	0.956	m^2

Ventilation Rate		Water Flow Rates		Effectiveness	Class
Volume m^3/s	Velocity m/s	Supply l/h	Penetrated l/h	%	
0.00	0.00	97.2	5.0	93.6	C
0.48	0.50	97.2	10.1	87.0	C
0.96	1.00	97.2	13.7	82.4	C
1.44	1.50	97.2	18.2	76.6	D
1.91	2.00	97.2	27.4	65.0	D
2.39	2.50	97.2	43.8	43.9	D
2.87	3.00	97.2	58.5	25.5	D
3.35	3.50	97.2	68.6	12.0	D

COEFFICIENT OF ENTRY

Air Temperature	17.9	°C	Core Area Height	987	mm
Barometer	979.5	mbar	Core Area Width	969	mm
Air Density	1.168	kg/m^3	Core Area Area	0.956	m^2

	Louvre Face Velocity	Air Flow Rate		
Louvre p.d. Pa	m/s	Test m^3/s	Theoretical m^3/s	Coefficient C_e
10.0	0.80	0.769	3.958	0.194
28.9	1.32	1.264	6.729	0.188
59.5	1.88	1.798	9.655	0.186
90.3	2.31	2.213	11.894	0.186
120.0	2.67	2.551	13.711	0.186
152.0	2.99	2.860	15.431	0.185
183.0	3.28	3.134	16.932	0.185
213.0	3.54	3.385	18.267	0.185
246.0	3.79	3.623	19.632	0.185
280.0	4.03	3.855	20.944	0.184
			Mean C_e	0.186
			Class	4

COEFFICIENT OF DISCHARGE

Air Temperature	18.5	°C	Core Area Height	987	mm
Barometer	980.0	mbar	Core Area Width	969	mm
Air Density	1.166	kg/m^3	Core Area Area	0.956	m^2

	Louvre Face Velocity	Air Flow Rate		
Louvre p.d. Pa	m/s	Test m^3/s	Theoretical m^3/s	Coefficient C_d
10.0	0.93	0.890	3.961	0.225
25.5	1.48	1.415	6.325	0.224
44.5	1.97	1.887	8.356	0.226
65.8	2.39	2.288	10.161	0.225
86.3	2.74	2.616	11.637	0.225
107.0	3.06	2.925	12.957	0.226
126.0	3.34	3.194	14.061	0.227
146.0	3.59	3.431	15.136	0.227
172.0	3.88	3.711	16.428	0.226
198.0	4.17	3.988	17.626	0.226
			Mean C_d	0.226
			Class	3

TYPICAL ASSEMBLY SECTIONAL DETAILS

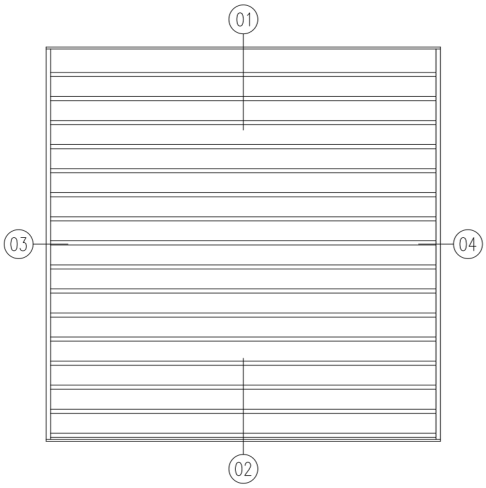

ELEVATION

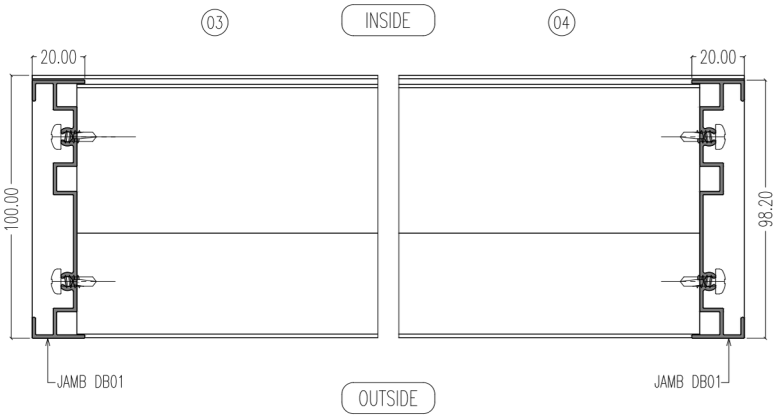

HORIZONTAL SECTIONS

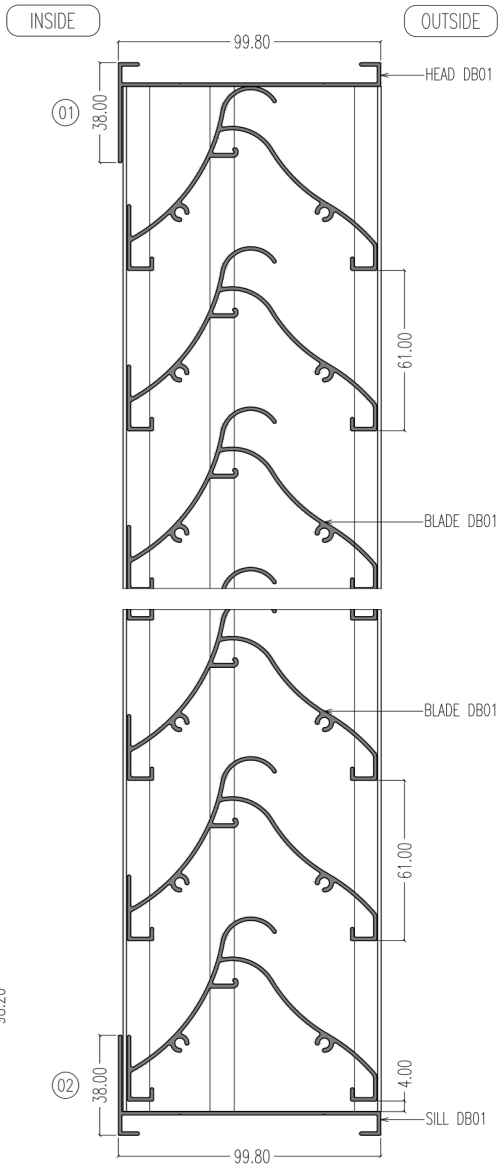

VERTICAL SECTION

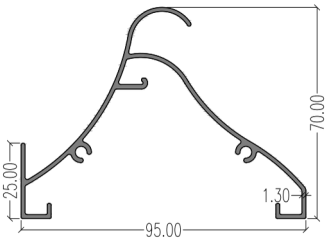

Blade DB01

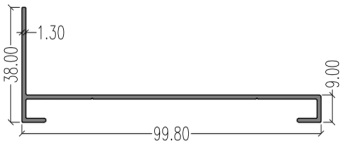

Head & Sill DB01

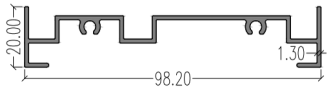

Jamb DB01

RAINWATER PENETRATION

Simulated Rainfall	75 (+10% / -0%)	mm/hr
Wind Speed	13 (+/-10%)	m/s

Core Area Height	988	mm
Core Area Width	958	mm
Core Area Area	0.947	m^2

Ventilation Rate		Water Flow Rates		Effectiveness	Class
Volume m^3/s	Velocity m/s	Supply l/h	Penetrated l/h	%	
0.00	0.00	99.4	0.0	100.0	A
0.49	0.51	99.4	0.2	99.7	A
0.97	1.03	99.5	1.2	98.5	B
1.44	1.52	99.2	3.1	96.0	B
1.90	2.00	99.1	9.4	87.9	C
2.33	2.47	99.2	27.5	64.8	D
2.84	3.00	99.4	33.7	56.4	D
3.32	3.51	98.5	41.4	46.5	D

COEFFICIENT OF ENTRY

Air Temperature	12.4	°C
Barometer	1003.6	mbar
Air Density	1.220	kg/m^3

Core Area Height	988	mm
Core Area Width	958	mm
Core Area Area	0.947	m^2

	Louvre Face Velocity	Air Flow Rate		
Louvre p.d. Pa	m/s	Test m^3/s	Theoretical m^3/s	Coefficient C_e
35.3	1.32	1.247	7.201	0.173
67.8	1.83	1.730	9.980	0.173
100. 0	2.23	2.106	12.120	0.174
135. 0	2.56	2.425	14.083	0.172
166. 0	2.86	2.707	15.616	0.173
200. 0	3.13	2.962	17.141	0.173
228. 0	3.37	3.192	18.301	0.174
266. 0	3.60	3.405	19.768	0.172
300. 0	3.81	3.607	20.993	0.172
330. 0	4.01	3.797	22.018	0.172
			Mean C_e	0.173
			Class	4

COEFFICIENT OF DISCHARGE

Air Temperature	12.4	°C	Core Area Height	988	mm
Barometer	1003.6	mbar	Core Area Width	958	mm
Air Density	1.220	kg/m^3	Core Area Area	0.947	m^2

	Louvre Face Velocity	Air Flow Rate		
Louvre p.d. Pa	m/s	Test m^3/s	Theoretical m^3/s	Coefficient C_d
13.7	0.83	0.787	4.486	0.175
45.9	1.50	1.423	8.212	0.173
76.8	1.96	1.853	10.622	0.174
111. 0	2.33	2.201	12.770	0.172
145. 5	2.68	2.533	14.620	0.173
181. 0	2.99	2.827	16.306	0.173
214. 0	3.27	3.092	17.731	0.174
250. 0	3.52	3.336	19.164	0.174
289. 0	3.76	3.563	20.605	0.173
323. 0	4.01	3.797	21.783	0.174
			Mean C_d	0.174
			Class	4

TYPICAL ASSEMBLY SECTIONAL DETAILS

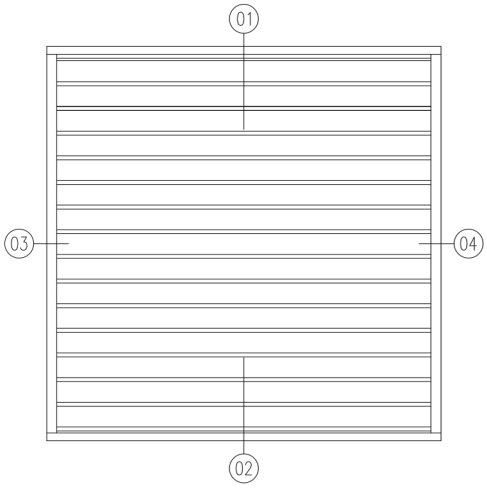

ELEVATION

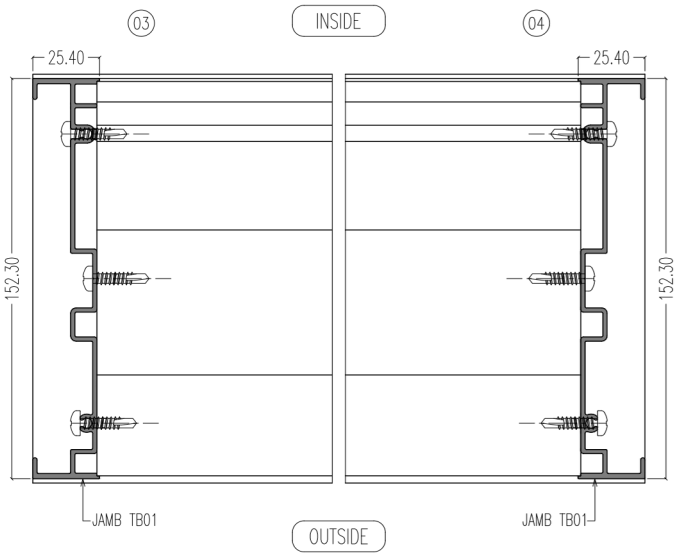

HORIZONTAL SECTIONS

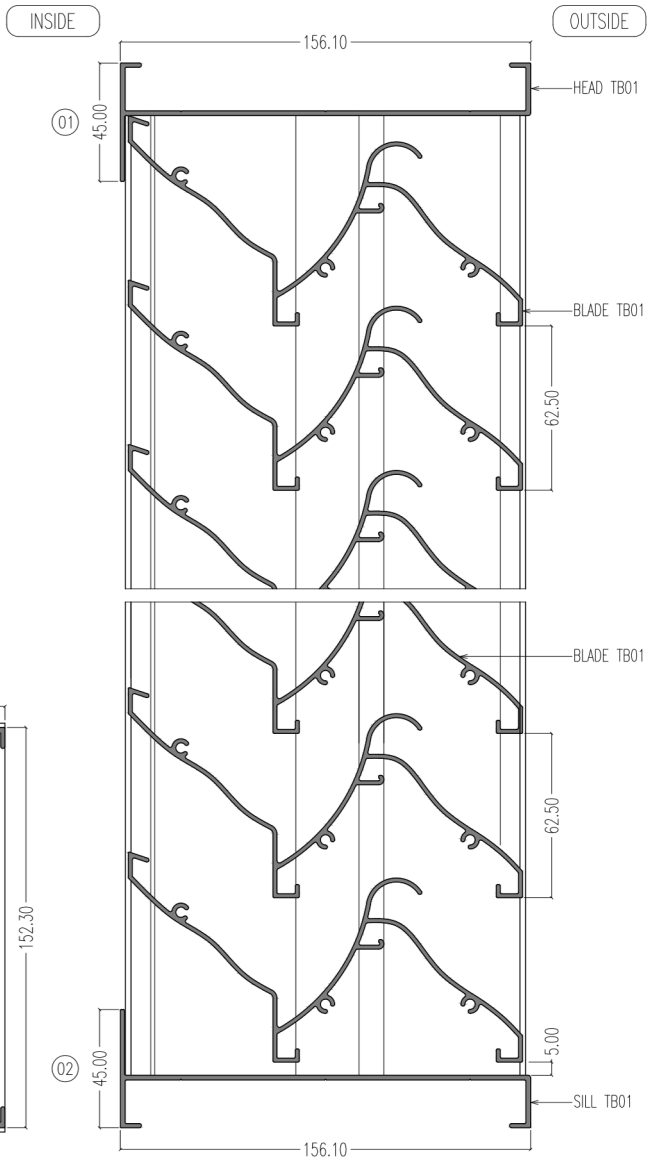

VERTICAL SECTION

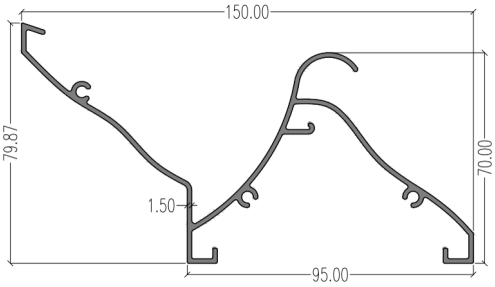

Blade TB01

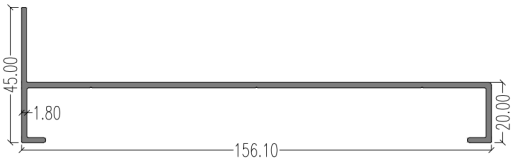

Head & Sill TB01

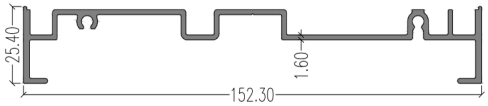

Jamb TB01

RAINWATER PENETRATION

			Core Area Height	958	mm
Simulated Rainfall	75 (+10% / -0%)	mm/hr	Core Area Width	949	mm
Wind Speed	13 (+/-10%)	m/s	Core Area Area	0.909	m^2

Ventilation Rate		Water Flow Rates		Effectiveness	Class
Volume m^3/s	Velocity m/s	Supply l/h	Penetrated l/h	%	
0.00	0.00	97.2	0.0	100.0	A
0.45	0.50	97.2	0.0	100.0	A
0.91	1.00	97.2	0.0	100.0	A
1.36	1.50	97.2	0.0	100.0	A
1.82	2.00	97.2	1.4	98.2	B
2.27	2.50	97.2	16.4	79.2	D
2.73	3.00	97.2	74.8	5.6	D
3.18	3.50	97.2	75.6	4.5	D

COEFFICIENT OF ENTRY

Air Temperature	25.8	°C	Core Area Height	958	mm
Barometer	1003.7	mbar	Core Area Width	949	mm
Air Density	1.165	kg/m^3	Core Area Area	0.909	m^2

	Louvre Face Velocity	Air Flow Rate		
Louvre p.d. Pa	m/s	Test m^3/s	Theoretical m^3/s	Coefficient C_e
11.1	0.63	0.571	3.969	0.144
56.8	1.42	1.291	8.978	0.144
103.0	1.90	1.727	12.090	0.143
146.0	2.27	2.062	14.394	0.143
192.0	2.60	2.359	16.506	0.143
237.0	2.88	2.617	18.339	0.143
286.0	3.15	2.864	20.146	0.142
346.0	3.46	3.143	22.158	0.142
402.0	3.73	3.389	23.884	0.142
458.0	3.99	3.628	25.493	0.142
			Mean C_e	0.143
			Class	4

COEFFICIENT OF DISCHARGE

Air Temperature	25.8	°C	Core Area Height	958	mm
Barometer	1003.2	mbar	Core Area Width	949	mm
Air Density	1.164	kg/m^3	Core Area Area	0.909	m^2

	Louvre Face Velocity	Air Flow Rate		
Louvre p.d. Pa	m/s	Test m^3/s	Theoretical m^3/s	Coefficient C_d
10.1	0.63	0.574	3.787	0.152
49.5	1.39	1.267	8.383	0.151
91.0	1.89	1.716	11.366	0.151
130.0	2.27	2.062	13.585	0.152
171.0	2.60	2.360	15.581	0.151
220.0	2.96	2.692	17.673	0.152
267.0	3.27	2.977	19.470	0.153
312.0	3.57	3.241	21.047	0.154
355.0	3.83	3.485	22.450	0.155
400.0	4.09	3.722	23.831	0.156
			Mean C_d	0.153
			Class	4

PL-TB02

TYPICAL ASSEMBLY SECTIONAL DETAILS

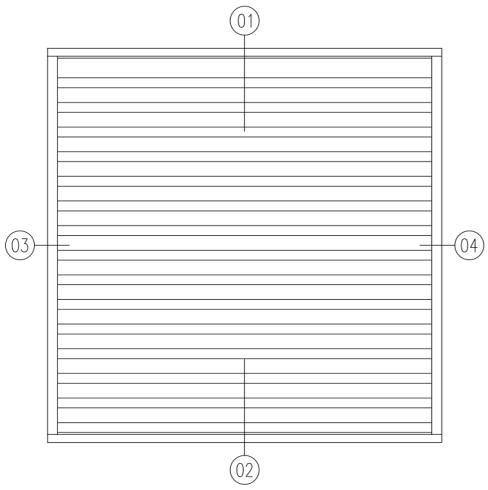

ELEVATION

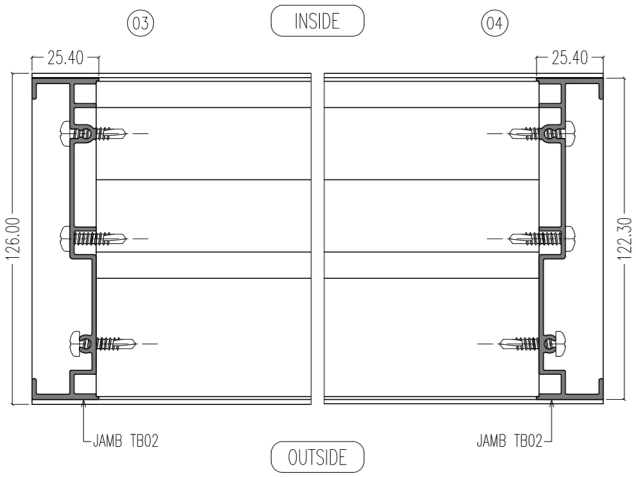

HORIZONTAL SECTIONS

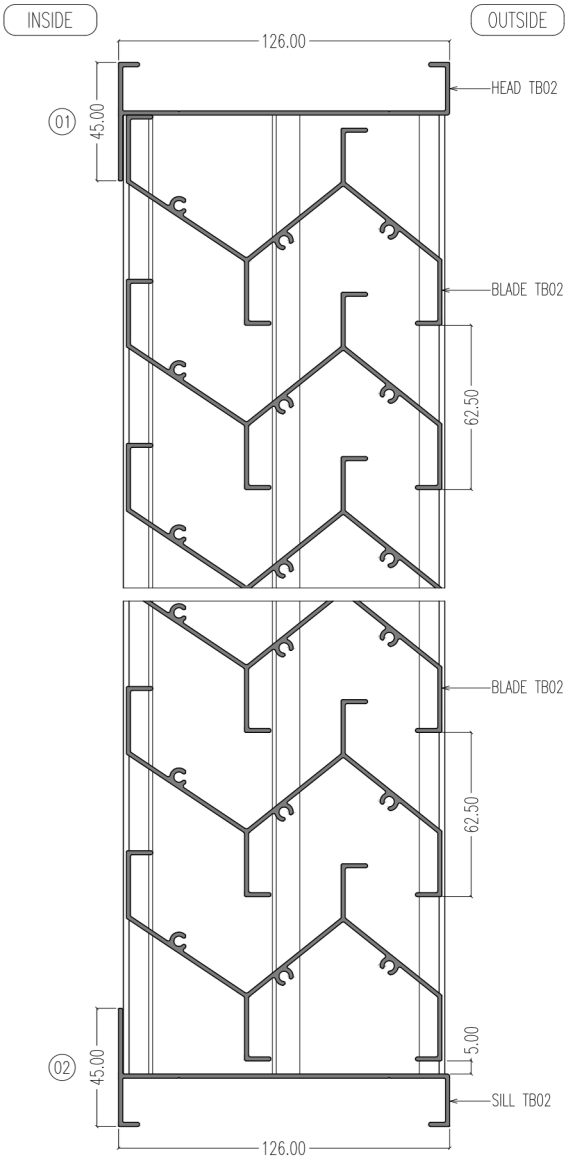

VERTICAL SECTION

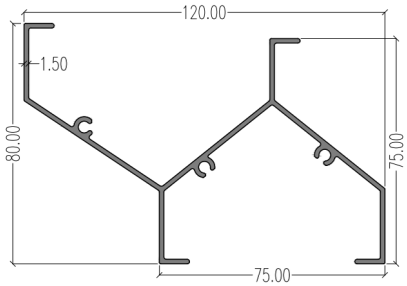

Blade TB02

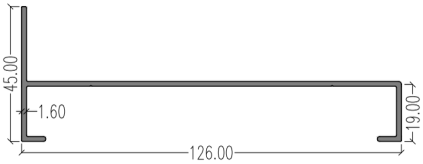

Head & Sill TB02

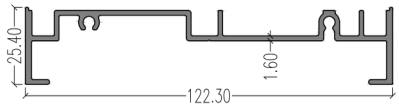

Jamb TB02

RAINWATER PENETRATION

			Core Area Height	959	mm
Simulated Rainfall	75 (+10% / -0%)	mm/hr	Core Area Width	942	mm
Wind Speed	13 (+/-10%)	m/s	Core Area Area	0.903	m^2

Ventilation Rate		Water Flow Rates		Effectiveness	Class
Volume m^3/s	Velocity m/s	Supply l/h	Penetrated l/h	%	
0.00	0.00	97.2	0.0	100.0	A
0.45	0.50	97.2	0.0	100.0	A
0.90	1.00	97.2	0.0	100.0	A
1.36	1.50	97.2	0.1	99.9	A
1.81	2.00	97.2	9.2	88.5	C
2.26	2.50	97.2	69.4	12.1	D
2.71	3.00	97.2	70.3	11.3	D
3.16	3.50	97.2	70.9	10.5	D

COEFFICIENT OF ENTRY

Air Temperature	25.4	°C	Core Area Height	959	mm
Barometer	1004.5	mbar	Core Area Width	942	mm
Air Density	1.167	kg/m^3	Core Area Area	0.903	m^2

	Louvre Face Velocity	Air Flow Rate		
Louvre p.d. Pa	m/s	Test m^3/s	Theoretical m^3/s	Coefficient C_e
23.6	0.63	0.568	5.744	0.099
90.2	1.25	1.126	11.230	0.100
160.0	1.66	1.498	14.956	0.100
240.0	2.04	1.841	18.318	0.101
320.0	2.35	2.122	21.152	0.100
399.0	2.62	2.371	23.619	0.100
480.0	2.89	2.608	25.905	0.101
560.0	3.12	2.820	27.981	0.101
641.0	3.35	3.023	29.936	0.101
724.0	3.56	3.212	31.815	0.101
			Mean C_e	0.100
			Class	4

COEFFICIENT OF DISCHARGE

Air Temperature	25.9	°C	Core Area Height	959	mm
Barometer	1004.1	mbar	Core Area Width	942	mm
Air Density	1.165	kg/m^3	Core Area Area	0.903	m^2

	Louvre Face Velocity	Air Flow Rate		
Louvre p.d. Pa	m/s	Test m^3/s	Theoretical m^3/s	Coefficient C_d
29.3	0.63	0.568	6.407	0.089
110.0	1.20	1.088	12.414	0.088
200.0	1.62	1.460	16.739	0.087
290.0	1.95	1.759	20.157	0.087
380.0	2.25	2.030	23.073	0.088
470.0	2.49	2.252	25.661	0.088
561.0	2.73	2.468	28.035	0.088
650.0	2.95	2.661	30.177	0.088
740.0	3.14	2.840	32.198	0.088
830.0	3.33	3.009	34.100	0.088
			Mean C_d	0.088
			Class	4

BRANCHES IN MALAYSIA

HQ SALES OFFICE
(Gate A)
Lot 11, Jalan Perusahaan 1,
Kawasan Perusahaan Beranang,
43700 Beranang, Semenyih,
Selangor Darul Ehsan.
Tel :+603-8725 8833 (Sales)
:+603-8725 8826 (Sales)
Fax :+603-8725 8886 (Sales)

JOHOR BAHRU
14 & 18, Lot PLO 206, Jalan Angkasa Mas 5,
Kawasan Perindustrian Tebrau II,
81100 Johor Bahru, Johor Darul Takzim.
Tel : +607-355 0545
Fax : +607-355 0549

MELAKA
Lot 90, Jalan IKS Malim Jaya 4,
Taman Malim Jaya, 75250 Melaka.
Tel : +606-337 3389
Fax : +606-337 2389

PENANG
Lot 241 (PT 1075),
Tingkat Perusahaan 6,
Kawasan Perusahaan Perai,
13600 Perai, Pulau Pinang.
Tel : +604-397 6998 /+604-397 6995
Fax : +604-397 6997

KLANG
Block 3-1-17, Jalan Nagasari A 36/A,
Pusat Dagangan Latania, Desa Latania,
Seksyen 36, 40470 Shah Alam,
Selangor Darul Ehsan.
Tel : +603-5166 2239 /+603-5166 5079
Fax : +603-5166 3829

KUANTAN
No. 4, Jalan IM 3/6,
Kawasan Perindustrian,
Bandar Indera Mahkota,
25200 Kuantan,
Pahang Darul Makmur.
Tel : +609-573 6666
Fax : +609-573 3322

KOTA KINABALU
Lot 7, Lorong Mangga 3,
SEDCO Industrial Estate,
5 1/2 Miles (Off Jalan Kolombong),
88450 Kota Kinabalu, Sabah.
Tel : +6088-436 421 /+6088-436 422
Fax : +6088-436 423

SUBSIDIARIES IN MALAYSIA

ALBE MARKETING SDN BHD
53 & 55, Jalan PBS 14/10,
Taman Perindustrian Bukit Serdang,
43300 Seri Kembangan,
Selangor Darul Ehsan.
Tel : +603-8945 4919/+603-8945 4920
Fax : +603-8945 4916
Email : albemarketing@lbalum.com.my

ALBE METAL SDN BHD
Lot 2.46, Jalan Perindustrian Mahkota 2,
Kawasan Perindustrian Mahkota,
43700 Beranang,
Selangor Darul Ehsan.
Tel : +603-8726 1365 /+603-8726 1083
Fax : +603-8723 8995
Email : albemetal@lbalum.com.my

LB ALUMINIUM (SARAWAK) SDN BHD
Lot 846 & 847, Block 7,
Muara Tebas Land District (MTLD),
Jalan Demak Laut 3,
Sejingkat Industrial Park,
93050 Kuching, Sarawak.
Tel : +6082-439 633
Fax : +6082-432 893

FACADE PERFORMANCE LAB SDN BHD
Lot PT 20470, Jalan Perindustrian Mahkota 3/F,
Taman Perindustrian Mahkota,
43700 Beranang,
Selangor Darul Ehsan.
Tel : +603-8725 8936
Email : enquiry@fplab.com.my

SEMS SDN BHD
Lot 2.14, Jalan Perindustrian Mahkota 5,
Kawasan Perindustrian Mahkota,
43700 Beranang,
Selangor Darul Ehsan.
Tel : +6018-386 1493/ +6018-989 1493
+6018-223 1493/ +6018-289 1493
Email : sales@sems.com.my

SUBSIDIARIES IN OVERSEAS

LB ALUMINIUM (SINGAPORE) PTE LTD
No. 11, Kaki Bukit Road 1,
#03-07, Eunos Technolink,
Singapore 415939.
Tel : +65-6345 9131 /+65-6745 5693
Fax : +65-6745 5627